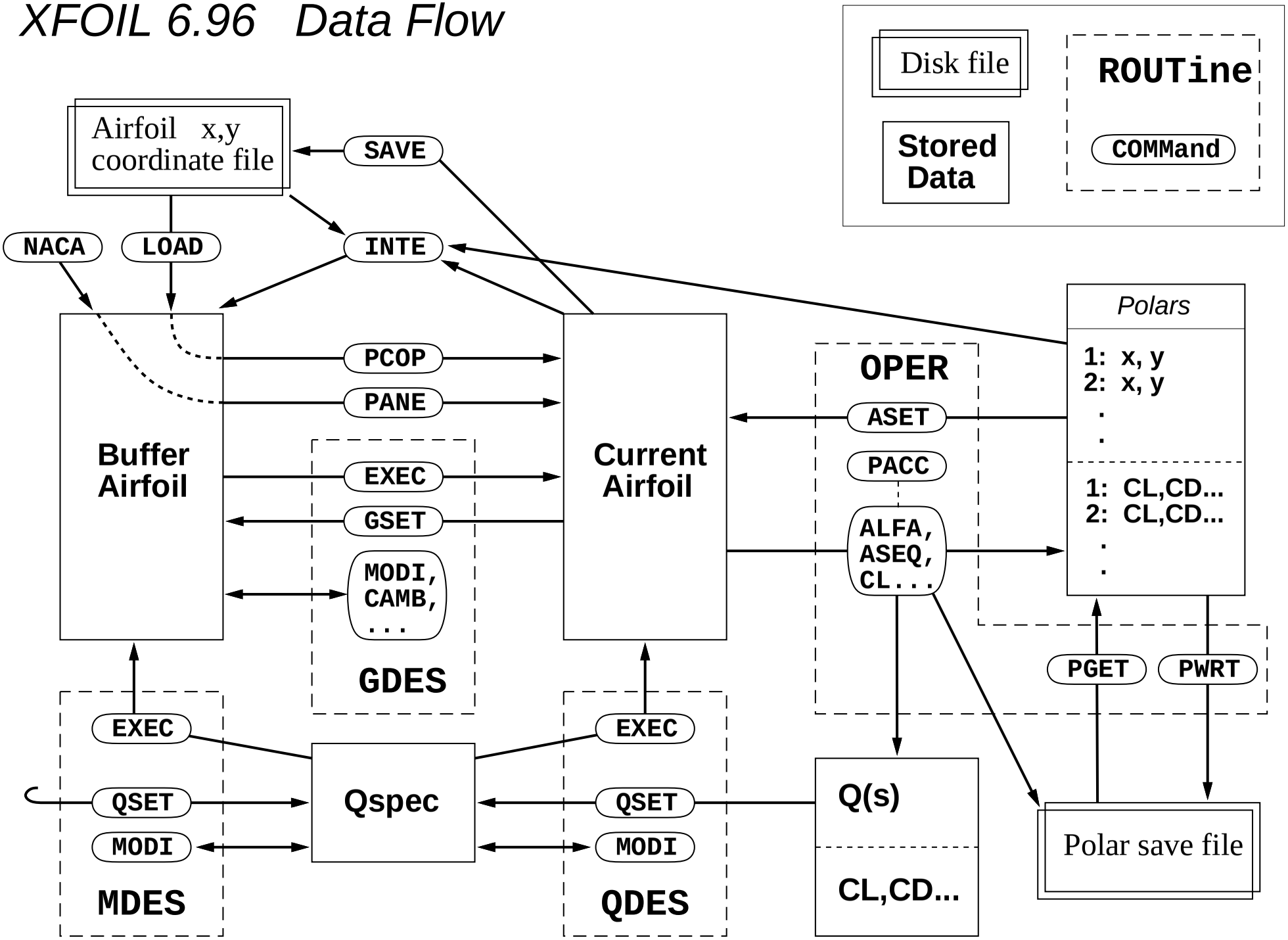XFOIL 6.96 Data Flow